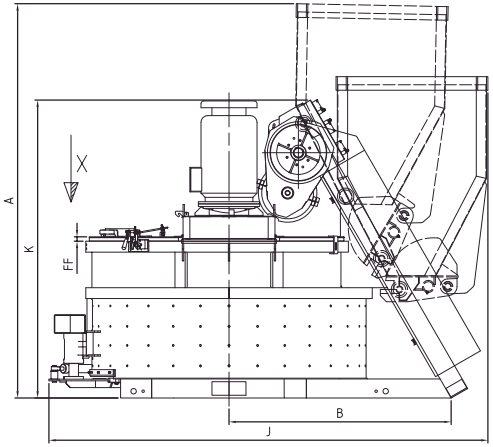

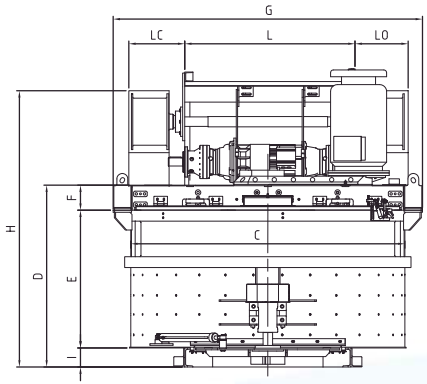

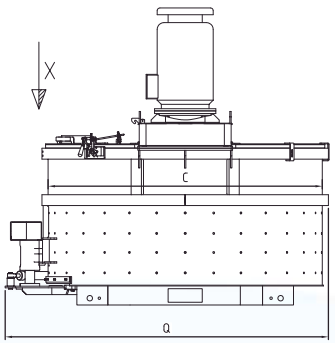

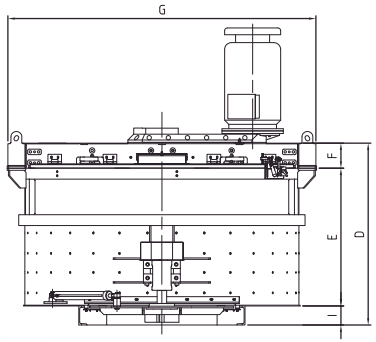

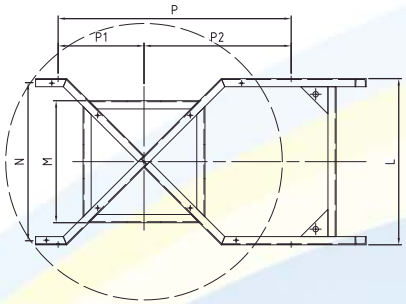

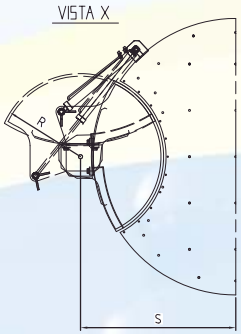

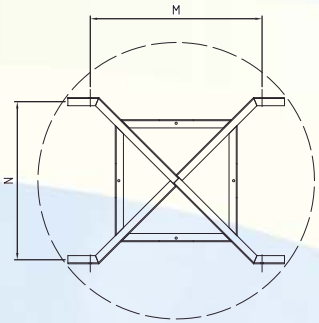

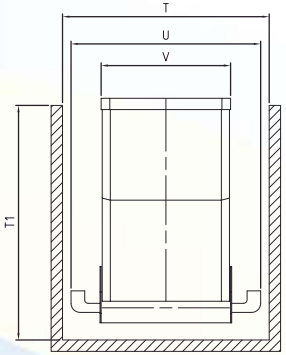

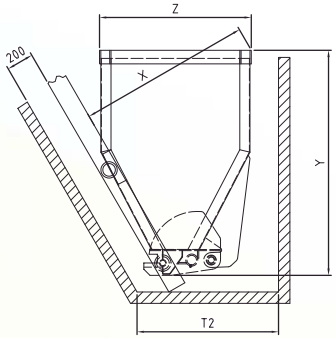

MODELLO TYPE	A	B	C	D	E	F	FF	G	H	I	J	K	L	LC	LO	M	N	N1	P	P1	P2	Q	R	S	T	T1	T2	U	V	Y	Z
MP 150/100	1730	1105	1010	750	505	160	75	1085	1500	80	1800	1610	750	375	375	600	720	600	1100	350	750	1320	380	615	1550	1100	800	940	610	810	600
MP 375/250	1790	1260	1270	910	460	355	40	1530	1500	100	2300	1630	900	280	280	500	850	850	1235	450	795	1575	380	755	1550	1100	800	1234	754	900	900
MP 565/375	2140	1335	1590	1110	555	430	40	1870	1610	120	2620	1760	1000	365	365	640	945	1040	1420	520	900	1900	480	910	1600	1300	800	1320	854	1170	950
MP 750/500	2491	1505	1835	1200	500	550	40	2100	1795	140	2955	1990	1100	295	295	740	1050	1180	1620	590	1030	2155	560	1050	1700	1500	900	1380	925	1350	1050
MP 1125/750	2900	1630	2015	1340	670	520	40	2270	2050	140	3320	2190	1220	465	405	810	1160	1260	1710	630	1080	2380	610	1140	2000	1850	900	1650	1009	1625	1115
MP 1500/1000	3045	1740	2215	1455	750	540	40	2470	2180	160	3450	2320	1150	413	413	850	1285	1480	1920	740	1180	2560	640	1225	2140	1900	900	1790	1150	1790	1120
MP 1875/1250	3045	1740	2400	1455	750	540	40	2470	2180	160	3500	2320	1150	413	413	980	1720	1610	1920	740	1180	2800	658	1325	2140	1900	900	1760	1150	1790	1120
MP 2250/1500	3200	2050	2612	1600	750	670	40	2740	2330	180	4370	2340	1500	430	385	1260	1200	1200	1800	600	1200	2975	700	1428	2400	2100	1150	1950	1200	1935	1430
MP 3000/2000	4200	2540	3470	1735	1230	685	40	3710	2450	200	5450	3190	1730	520	520	1050	1450	1450	2000	725	1275	3792	700	1845	2400	2500	1550	1930	1220	2280	1700
MP 3750/2500	4200	2540	3470	1735	1230	685	40	3710	2450	200	5450	3190	1730	520	520	1050	1450	1450	2000	725	1275	3792	700	1845	2400	2500	1550	1930	1220	2650	1700
MP 4500/3000	-	-	4000	1756	1025	550	250	-	-	200	-	-	-	-	-	-	-	-	-	-	-	4600	1200	2200	-	-	-	-	-	-	-
MP 6000/4000	-	-	4000	1756	1025	550	250	-	-	200	-	-	-	-	-	-	-	-	-	-	-	4600	1200	2200	-	-	-	-	-	-	-

N.B. I DATI TECNICI SONO SOGGETTI A VARIAZIONI SENZA ALCUN PREAVVISO DA PARTE DEL COSTRUTTORE / *N.B. TECHNICAL DATA ARE SUBJECT TO CHANGE WITHOUT NOTICE DUE TO CONTINUOUS QUALITY IMPROVMENTS*